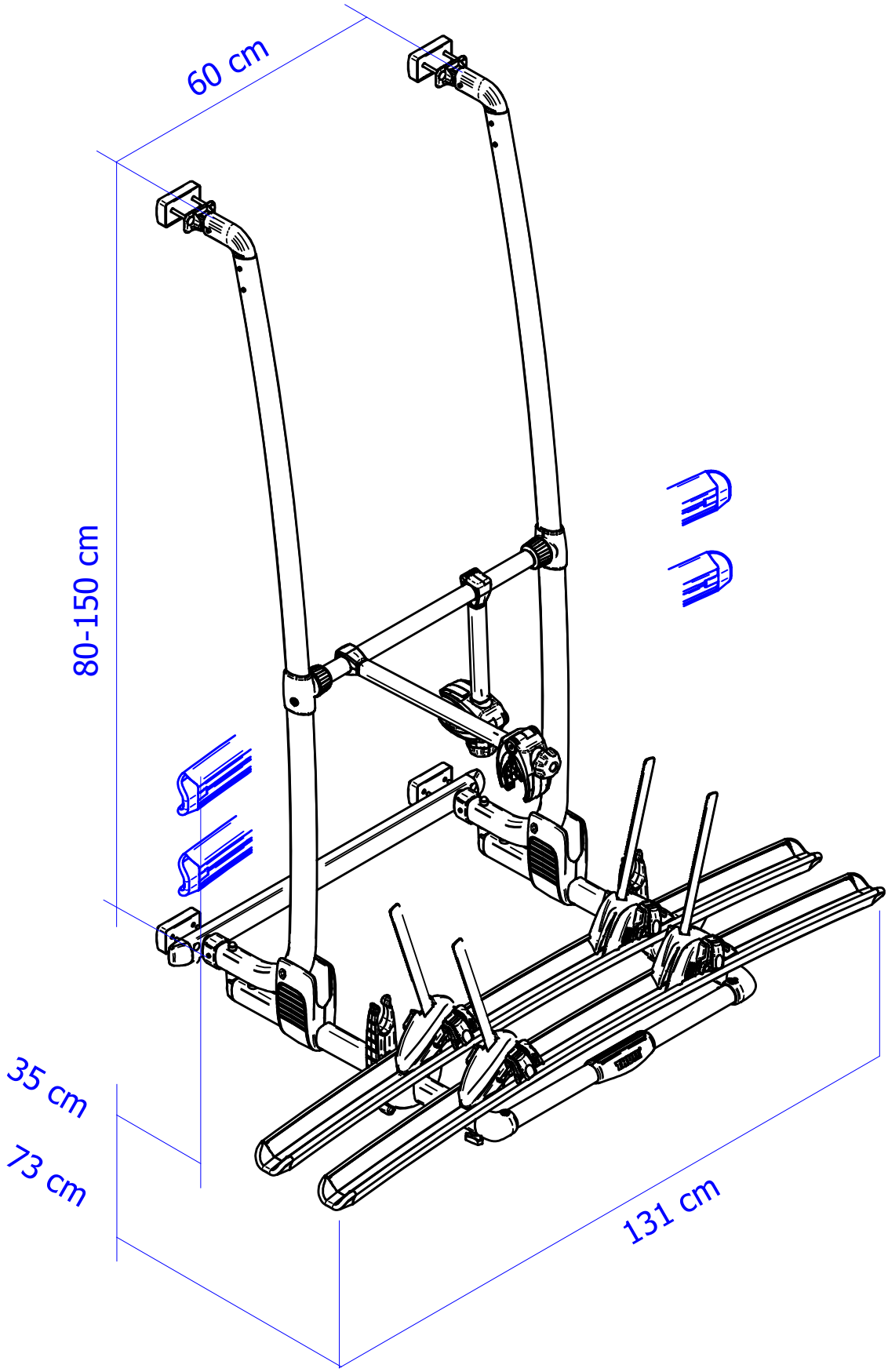

Material: .		Scale: 1:10	
Colour: pantone or RAL		Page: A4	
Volume: mm³ / Weight: kg		By: GZ	Date: 25-02-2013
Thule Group	**THULE EXCELLENT** **LV - main dimensions**	Item nr: 309821	
		Drawing nr: EX601-00	
		Status: released	

Thule NV
Kortrijkstraat 343
B-8930 Menen
T +32 56 52 88 99
F +32 56 51 02 05

CONFIDENTIAL - All proprietary rights including know-how reserved Thule Group. The copying, distribution and utilization of this document as well as the communication of its content to others without Thule Group's prior written consent is prohibited. Contravention will be prosecuted.